CC2300 VI

Heavy Tandem Rollers - Articulated



DYNAPAC
FAYAT GROUP

TECHNICAL DATA

Technical data

Compaction

Centrifugal force, high amplitude	16,906 lbf
Centrifugal force, high amplitude	16,906 lbf
Centrifugal force, low amplitude	11,892 lbf
Centrifugal force, low amplitude	18,996 lbf
Nominal amplitude, High	0.0236 in
Nominal amplitude, Low	0.012 in
Static linear load, front	24 lb/in
Static linear load, rear	23 lb/in
Vibration, high amplitude	2,700 vpm
Vibration, low amplitude	4,020 vpm

Hydraulic system

Driving	Axial piston pump with variable displacem. Rad. piston motors(4) with variable displacem.
Parking/emergency brake	Failsafe multidisc brake in both drums.
Service brake	Hydrostatic in forward and reverse lever.
Steering	Gear pump with constant displacement

Drum

Drum width	59 in
Split drums	Yes

Weights

Front module weight	9,149 lb
Max operating weight	20,062 lb
Rear module weight	8,598 lb

Fluids

Fuel tank	35 US gal
Hydraulic, oil in system	16 US gal

Standards and certifications

Guaranteed Sound power level, LwA	106 dB

Offset

Off-set	14 in

Drive

Speed, transport	7 mph

Speed

Speed, working	4 mph

Steering

Steering Angle	32 °
Turning Radius, inside	196 in
Turning Radius, outside	259 in

Traction

Vertical oscillation	6 °

Spray system

Water tank volume	185 US gal

Dimension Machine

Working width	59 in

Engine

Emission	Stage V
Manufacturer	Deutz
Model	TD3.6
Rated power	55 kW (75 hp) @ 2,200 rpm
Rated power according to standard	SAE J1995
Type	Water cooled turbo diesel

Engine

Emission	Stage IIIA/Tier 3
Manufacturer	Cummins
Model	QSB 3.3
Rated power	1. 74 kW (99 hp) @ 2,200 rpm 2. 60 kW (80 hp) @ 2,200 rpm
Rated power according to standard	SAE J1995
Type	Water cooled turbo diesel

Dimensions

SIDE VIEW

A	131 in	Wheelbase
C	23 in	Curb Clearance
D	44 in	Drum Diameter
H1	118 in	Height
K	11 in	Ground clearance
L	176 in	Length
S	1 in	Drum shell thickness

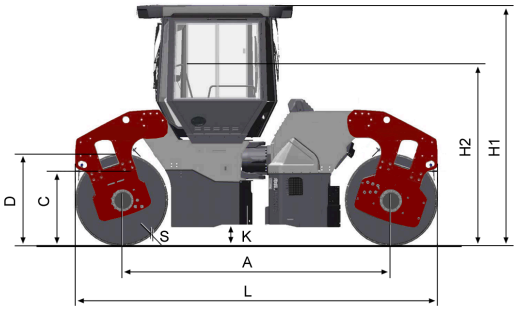

TOP VIEW

O1	14 in	Off-set
R1	259 in	Turning Radius, outside
R2	196 in	Turning Radius, inside
W	59 in	Drum width
α	32 °	Steering Angle

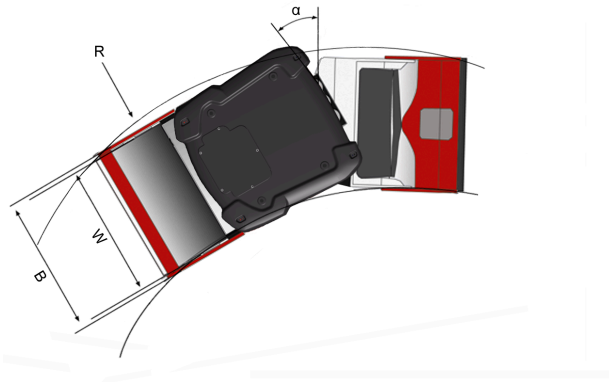

Questions?

We're happy to help

Find your closest dealer at dynapac.com

