CC2200 VI

Heavy Tandem Rollers - Articulated



DYNAPAC
FAYAT GROUP

TECHNICAL DATA

Technical data

Compaction

Centrifugal force, high amplitude	75.3 kN
Centrifugal force, high amplitude	75.3 kN
Centrifugal force, low amplitude	40 kN
Centrifugal force, low amplitude	61.9 kN
Nominal amplitude, High	0.72 mm
Nominal amplitude, Low	0.29 mm
Static linear load, front	27.3 kg/cm
Static linear load, rear	26 kg/cm
Vibration, high amplitude	47 Hz
Vibration, low amplitude	67 Hz

Hydraulic system

Driving	Axial piston pump with variable displacem. Rad. piston motors(2) with variable displacem.
Parking/emergency brake	Failsafe multidisc brake in both drums.
Service brake	Hydrostatic in forward and reverse lever.
Steering	Gear pump with constant displacement

Drum

Drum width	1,500 mm
Split drums	No

Weights

Front module weight	4,100 kg
Max operating weight	8,830 kg
Rear module weight	3,900 kg

Fluids

Fuel tank	132 l
Hydraulic, oil in system	60 l

Standards and certifications

Guaranteed Sound power level, LwA	106 dB

Offset

Off-set	345 mm

Drive

Speed, transport	12 km/h

Speed

Speed, working	6 km/h

Steering

Steering Angle	32 °
Turning Radius with off-set, inside	3,390 mm
Turning Radius, inside	4,990 mm
Turning Radius, outside	6,570 mm

Traction

Vertical oscillation	6 °

Spray system

Water tank volume	700 l

Dimension Machine

Working width	1,500 mm

Engine

Emission	Stage IIIA/Tier 3
Manufacturer	Cummins
Model	QSB 3.3
Rated power	1. 74 kW (99 hp) @ 2,200 rpm 2. 60 kW (80 hp) @ 2,200 rpm
Rated power according to standard	SAE J1995
Type	Water cooled turbo diesel

Engine

Emission	Stage IIIB/Tier 4
Manufacturer	Deutz
Model	TCD 3.6 HT
Rated power	55 kW (74 hp) @ 2200 rpm
Rated power according to standard	SAE J1995
Type	Water cooled turbo diesel

Engine

Emission	Stage V
Manufacturer	Deutz
Model	TD3.6
Rated power	55 kW (75 hp) @ 2,200 rpm
Rated power according to standard	SAE J1995
Type	Water cooled turbo diesel

Dimensions

SIDE VIEW

A	3,340 mm	Wheelbase
C	580 mm	Curb Clearance
D	1,120 mm	Drum Diameter
H1	2,990 mm	Height
K	270 mm	Ground clearance
L	4,460 mm	Length
S	20 mm	Drum shell thickness

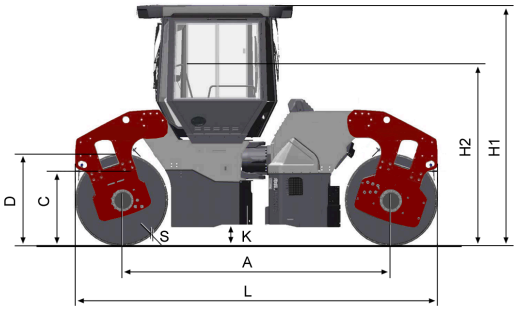

TOP VIEW

B1	1,680 mm	Width, front
B2	1,930 mm	Width, assymetric cab
O1	345 mm	Off-set
R1	6,570 mm	Turning Radius, outside
R2	4,990 mm	Turning Radius, inside
R3	4,890 mm	Turning Radius with off-set, outside
R4	3,390 mm	Turning Radius with off-set, inside
W	1,500 mm	Drum width
α	32 °	Steering Angle

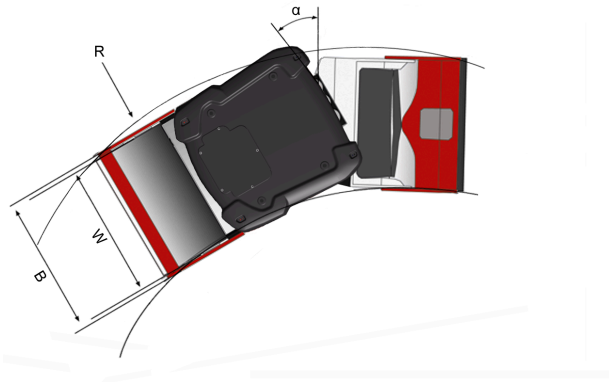

Questions?

We're happy to help

Find your closest dealer at dynapac.com

